TECHNICAL REPORT
No. 51005 – 20 – TAC

Test according to
ČSN EN 1789
Medical vehicles and their equipment - Road ambulances

Test method: ČSN EN 1789 of 2010-08-01

Objectives: FE analysis of locking systems PA-271, PA-281 and PA-570 under loading specified by ČSN EN 1789 section 4.5.9 and 6.3.5.

I. Technical data

0.1.1	Order party:	Advanced Engineering, s.r.o. Na ostrohu 2405/16 160 00 Praha 6
0.1.2.	Manufacturer:	Promeba Productos Metálicos del Bages, S.L. Carretera C-16 Km 59.5 08650 Sallent (Barcelona) Spain, EU
0.2.	Product under test:	Locking systems PA-271, PA-281 and PA-570
0.3.	Test required:	FEM analysis of locking systems PA-271, PA-281 and PA-570. Loading is specified by ČSN EN 1789 section 4.5.9. Requirement of this standard is to provide sufficient strength of the structures mentioned before to withstand the deceleration loading defined by pulse in fig. 1. The peak value of deceleration is specified by EN 1789 min. 10g ± 2g in all directions.

II. Test report

1. Test conditions

1.1. Test sample:

Locking system PA-271 + Evacuation chair PS-251 + Power track PA-260.

Locking system PA-281 + Evacuation chair PS-251.

Locking system PA-570 + Evacuation chair PS-171.

1.2. Test procedures used:

FEM nonlinear dynamic analyses, using the sw. Hyperworks.

Simulations were performed in Radioss v18 solver.

In total six loading modes:

- Loading 10g forward
- Loading 10g rearward
- Loading 10g lateral sideward
- Loading 10g lateral sideward opposite direction
- Loading 10g upward
- Loading 10g downward

1.2. Examination process:

FEM nonlinear dynamic analyses, using the sw. Hyperworks.
Simulations were performed in Radioss v19 solver. In total five loading modes:

- Loading 10g forward
- Loading 10g rearward
- Loading 10g lateral sideward (locks are symmetrical so only one lateral direction is consider)
- Loading 10g upward
- Loading 10g downward

1.2.1. Loading:

The total weight of locking system PA-271 20.65 kg
The total weight of PS-251 + PA-260 28.00 kg
The total weight of locking system PA-281 11.25 kg
The total weight of PS-251 13.50 kg

The total weight of locking system PA-570 2.53 kg
The total weight of PS-171 8.00 kg
Load acting on the assemblies 10g in all directions (limit specified by EN 1789)

1.2.2. Boundary conditions:

Boundary conditions were applied to locking systems PA-271, PA281 and PA-570 with respect to the original anchorage points in the ambulance. Deceleration pulse in each direction was applied to the locking systems including chairs and power track, see fig. 1. Gravitational acceleration $g=9.81ms^{-2}$ was applied during all analyses.
Analysis time was determined to 250 ms to all load cases. This time value is sufficient to reach the maximum values of the internal and kinetic energy of the entire system. The models consist of several types of contacts. Global contact (self-contact) was set to the entire model and had a nominal friction value of 0.1

1.2.3. Description of the FE models:

Minimum time-step for analysis with respective mesh size was set to 0.2 μs, which ensures numerical stability with very less added mass. Rigid body elements (RBE2) have been used as joining strategy between the most of the structurally less important parts. Important parts have been connected via 1D beam elements representing bars and bolts with respective mechanical properties.

The models contain chair parts that are or could be in contact with locking systems and ground during the test. The all chair elements are joined by rigid body element include the added mass in the chair center of gravity. The models contain moving parts that hold the chair in the locking system and that are supported by preloaded springs. Preloading of the all springs reach the maximum possible torque moment (739.755 Nmm for PA-271 and 1.367 Nmm for PA-281 and PA-570). Two models (PA-281 and PA-570) contain belt that also hold the chair in the locking system. Belts have the EC R16 homologation so they are not evaluated.

1.2.4. FE model parameters:

- Nominal mesh size [mm] 5
- PA-271 - number of elements 58 300
- PA-281 - number of elements 42 700
- PA-570 - number of elements 15 900

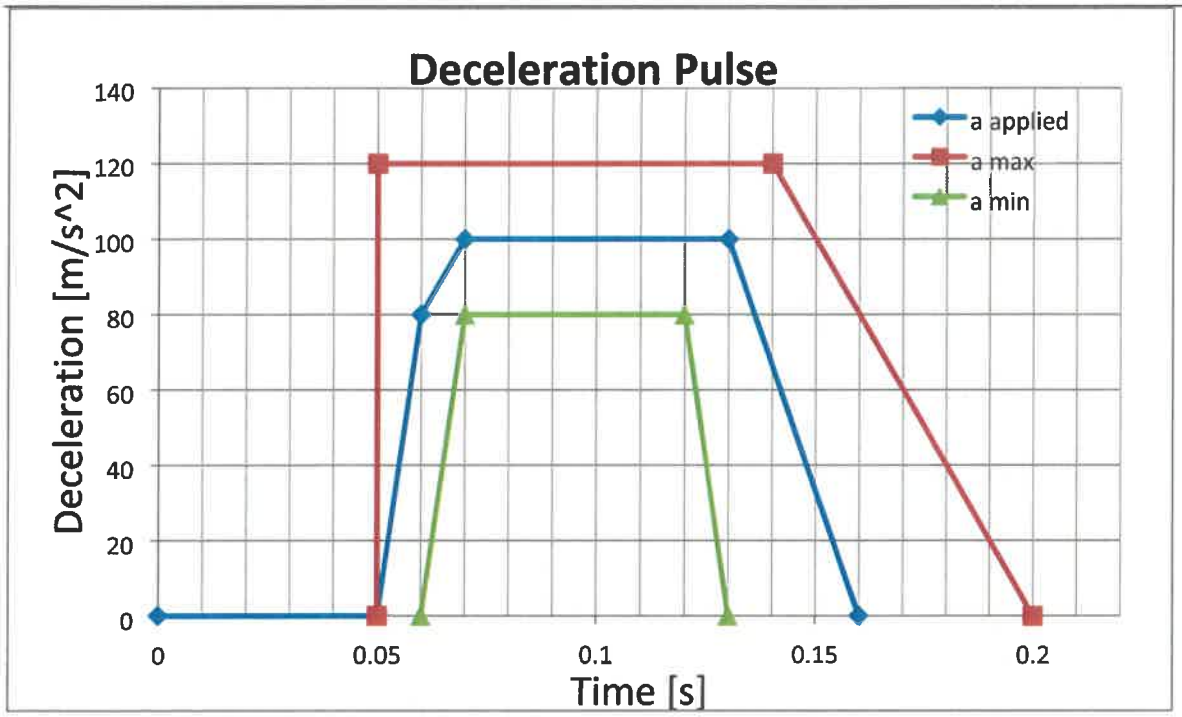

Fig. 1 – Defined deceleration pulse given by EN 1789

Fig. 2 – FE model of the locking system PA-271

Fig. 3 – FE model PA-271 including chair PS-251 and power track PA-260

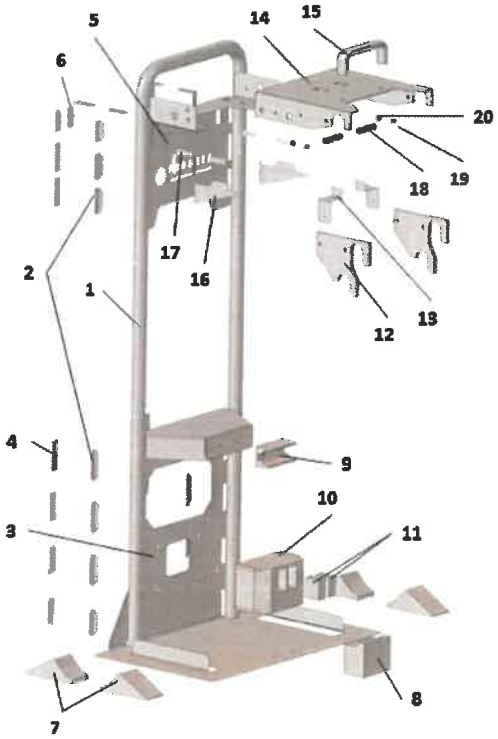

Fig. 4 – Material breakdown for the locking system PA-271

Fig. 5 – Material breakdown for welds and 1D component (PA-271)

Tab. 1 – Materials and their mechanical properties used in FE analysis PA-271.

Material	Yield Stress R_e [MPa]	UTS R_m [MPa]	Elongation [%]	Part Nr. (see Fig. 4 and 5)
St 12	140	270	28	1, 5, 13, 16,
AISI-302	205	515	40	24,
AISI-1008	180	303	42	12, 14,
AISI-1020	350	420	15	3, 18, 19, 25, 26
AISI-6063-T5	145	186	12	
Steel bolts grade 3.6	180	300	25	20, 22, 23,
CU-ETP	69	220	50	11,
St 12 - HAZ	105	202.5	28	2, 6, 17, 21,
AISI-1020 - HAZ	262.5	315	15	4,
PA6.6-glass reinf-30p	80	130	4	9, 10,
Delrin-POM	71	92	30	7, 8,
PP	27	28	9	15

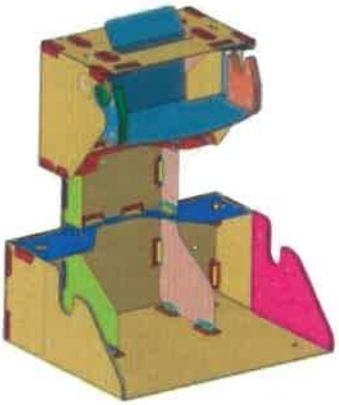

Fig. 6 – FE model of locking system PA-281

Fig. 7 – FE model PA-281 including chair PS-251

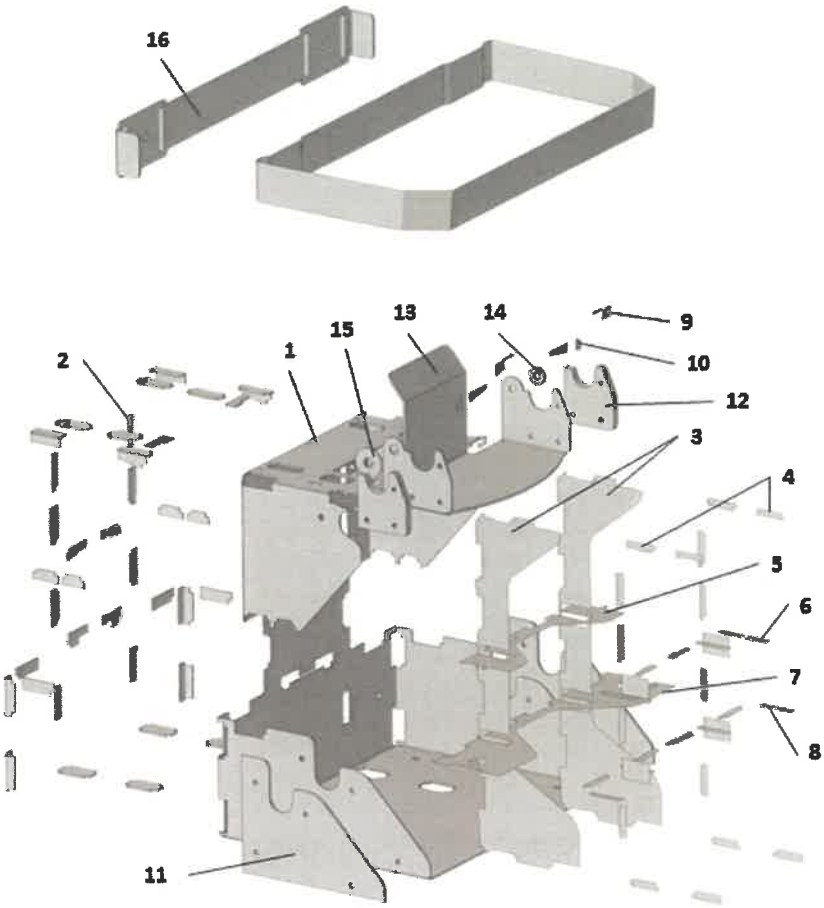

Fig. 8 – Material breakdown for the locking system PA-281

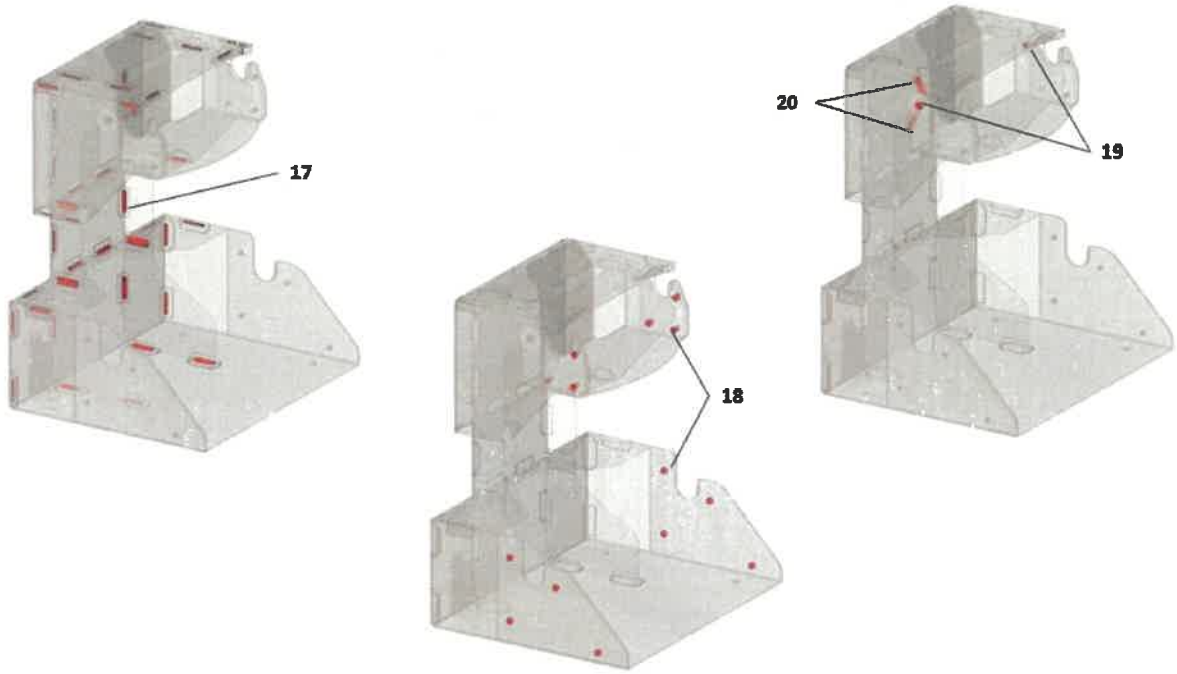

Fig. 9 – Material breakdown for welds and 1D component (PA-281)

Tab. 2 – Materials and their mechanical properties used in FE analysis PA-281.

Material	Yield Stress R_e [MPa]	UTS R_m [MPa]	Elongation [%]	Part Nr. (see Fig. 8 and 9)
St 12	140	270	28	1, 3, 5, 7, 9, 13
AISI-302	205	515	40	20
AISI-1008	180	303	42	16
AISI-1020	350	420	15	
AISI-6063-T5	145	186	12	
Steel bolts grade 3.6	180	300	25	14, 15, 18, 19,
CU-ETP	69	220	50	
St 12 - HAZ	105	202.5	28	2, 4, 6, 8, 10, 17
AISI-1020 - HAZ	262.5	315	15	
PA6.6-glass reinf-30p	80	130	4	
Delrin-POM	71	92	30	11, 12,
PP	27	28	9	

Fig. 10 – FE model of locking system PA-570

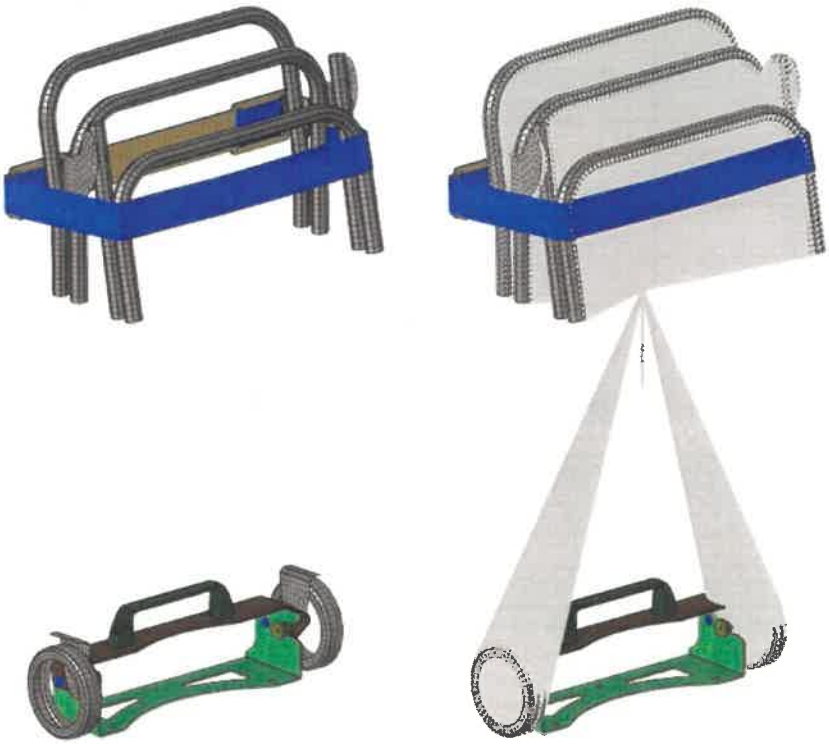

Fig. 11 – FE model PA-570 including chair PS-171

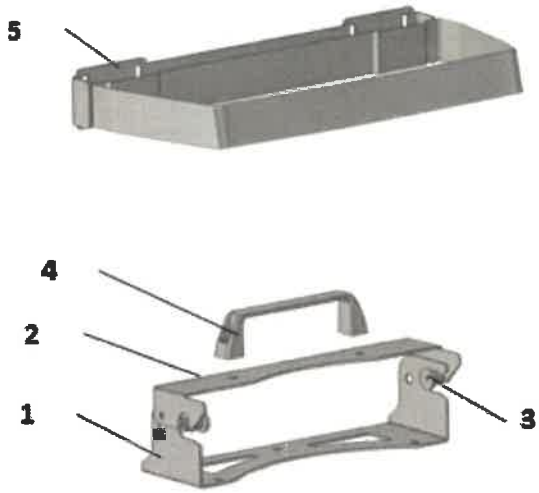

Fig. 12 – Material breakdown for the locking system PA-570

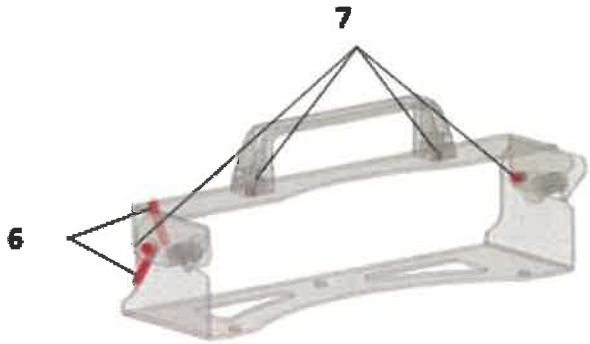

Fig. 13 – Material breakdown for welds and 1D component (PA-570)

Tab. 3 – Materials and their mechanical properties used in FE analysis PA-570

Material	Yield Stress R_e [MPa]	UTS R_m [MPa]	Elongation [%]	Part Nr. (see Fig. 12 and 13)
St 12	140	270	28	
AISI-302	205	515	40	6,
AISI-1008	180	303	42	1, 2, 5,
AISI-1020	350	420	15	
AISI-6063-T5	145	186	12	3,
Steel bolts grade 3.6	180	300	25	7,
CU-ETP	69	220	50	
St 12 - HAZ	105	202.5	28	
AISI-1020 - HAZ	262.5	315	15	
PA6.6-glass reinf-30p	80	130	4	4,
Delrin-POM	71	92	30	
PP	27	28	9	

2. Test results

2.1 Test results PA - 271

2.1.1 Evaluation of plastic strain in the locking systems for given load cases:

The value of plastic strain in material of the locking systems is related to elongation of the used material. Contour representations of plastic strain in structures of the locking systems for the worst scenarios are shown in the attachment 1.

LONGITUDINAL FORWARD DECELERATION (+Z):
Attachment 1.1 – Computational results
Maximum plastic strain was found in 250 ms of the running time, see fig. 14. This loading scenario causes the maximum plastic strain in the springs. Other parts did not reach plastic region. None of the plastic strain value exceeded the limit.

LONGITUDINAL REARWARD DECELERATION (-Z):
Attachment 1.2 – Computational results
Maximum plastic strain was found in 250 ms of the running time, see fig. 15. This loading scenario causes the maximum plastic strain in the springs. Other parts did not reach plastic region. None of the plastic strain value exceeded the limit.

LATERAL SIDEWARD DECELERATION (+X):
Attachment 1.3 – Computational results

Maximum plastic strain was found in 250 ms of the running time, see fig. 16. This loading scenario causes the maximum plastic strain in the top plate (cover) that is in the contact with chair. None of the plastic strain value exceeded the limit.

VERTICAL DOWNWARD DECELERATION (-Y):
Attachment 1.5 – Computational results
Maximum plastic strain was found in 250 ms of the running time, see fig. 17. This loading scenario causes the maximum plastic strain in the weld that joins reinforcement rib and upper bended plate. None of the plastic strain value exceeded the limit.

VERTICAL UPWARD DECELERATION (+Y):
Attachment 1.5 – Computational results
Maximum plastic strain was found in 250 ms of the running time, see fig. 18. This loading scenario causes the maximum plastic strain in the springs. Other parts did not reach plastic region. None of the plastic strain value exceeded the limit.

2.1.2 Maximum plastic strain for all load cases with respect to material assignment:

Scenario	Forward	Rearward	Sideward	Downward	Upward
	St 12				
Elongation at fracture [%]	28				
Maximum elongation [%]	0	0	0.2	0.3	0
Evaluation	PASSED	PASSED	PASSED	PASSED	PASSED
	AISI-302				
Elongation at fracture [%]	40				
Maximum elongation [%]	1	1	1.4	1.1	0.9
Evaluation	PASSED	PASSED	PASSED	PASSED	PASSED
	AISI-1008				
Elongation at fracture [%]	42				
Maximum elongation [%]	0	0	3.1	1.6	0
Evaluation	PASSED	PASSED	PASSED	PASSED	PASSED
	AISI-1020				

Elongation at fracture [%]	15				
Maximum elongation [%]	0	0	0	0	0
Evaluation	PASSED	PASSED	PASSED	PASSED	PASSED
	Steel bolts grade 3.6				
Elongation at fracture [%]	25				
Maximum elongation [%]	0	0	0.4	0	0
Evaluation	PASSED	PASSED	PASSED	PASSED	PASSED
	CU-ETP				
Elongation at fracture [%]	50				
Maximum elongation [%]	0	0	0	0	0
Evaluation	PASSED	PASSED	PASSED	PASSED	PASSED
	St 12 - HAZ				
Elongation at fracture [%]	28				
Maximum elongation [%]	0	0	1.3	1.7	0
Evaluation	PASSED	PASSED	PASSED	PASSED	PASSED
	AISI-1020 - HAZ				
Elongation at fracture [%]	15				
Maximum elongation [%]	0	0	0	0	0
Evaluation	PASSED	PASSED	PASSED	PASSED	PASSED
	PA6.6-glass reinf-30p				
Elongation at fracture [%]	4				
Maximum elongation [%]	0	0	0	0	0
Evaluation	PASSED	PASSED	PASSED	PASSED	PASSED
	Delrin-POM				
Elongation at fracture [%]	30				

Maximum elongation [%]	0	0	0	0	0
Evaluation	PASSED	PASSED	PASSED	PASSED	PASSED
	PP				
Elongation at fracture [%]	9				
Maximum elongation [%]	0	0	0	0	0
Evaluation	PASSED	PASSED	PASSED	PASSED	PASSED

2.2 Simulation results PA-281

2.2.1 Evaluation of plastic strain in the locking systems for given load cases:

The value of plastic strain in material of the locking systems is related to elongation of the used material. Contour representations of plastic strain in structures of the locking systems for the worst scenarios are shown in the attachment 1.

LONGITUDINAL FORWARD DECELERATION (+Z):
Attachment 1.1 – Computational results
Maximum plastic strain was found in 250 ms of the running time, see fig. 19. This loading scenario causes the maximum plastic strain in the vertical rib. None of the plastic strain value exceeded the limit. Acceleration forces open the lock so the belt was added to secure the chair.

LONGITUDINAL REARWARD DECELERATION (-Z):
Attachment 1.2 – Computational results
Maximum plastic strain was found in 250 ms of the running time, see fig. 20. This loading scenario causes the maximum plastic strain in the belt holder. None of the plastic strain value exceeded the limit.

LATERAL SIDEWARD DECELERATION (+X):
Attachment 1.3 – Computational results
Maximum plastic strain was found in 250 ms of the running time, see fig. 21. This loading scenario causes the maximum plastic strain in the weld that joins small upper reinforcement rib with the main box. None of the plastic strain value exceeded the limit.

VERTICAL DOWNWARD DECELERATION (-Y):
Attachment 1.5 – Computational results
Maximum plastic strain was found in 250 ms of the running time, see fig. 22. This loading scenario causes the maximum plastic strain in the spring. None of the plastic strain value exceeded the limit.

VERTICAL UPWARD DECELERATION (+Y):
Attachment 1.5 – Computational results
Maximum plastic strain was found in 250 ms of the running time, see fig. 23. This loading scenario causes the maximum plastic strain in the spring. None of the plastic strain value exceeded the limit. Acceleration forces open the lock so the belt was added to secure the chair.

2.2.2 Maximum plastic strain for all load cases with respect to material assignment:

Scenario	Forward	Rearward	Sideward	Downward	Upward
	St 12				
Elongation at fracture [%]	28				
Maximum elongation [%]	3	0	6.8	0	0
Evaluation	PASSED	PASSED	PASSED	PASSED	PASSED
	AISI-302				
Elongation at fracture [%]	40				
Maximum elongation [%]	1.1	0.5	0.6	0.5	0.8
Evaluation	PASSED	PASSED	PASSED	PASSED	PASSED
	AISI-1008				
Elongation at fracture [%]	42				
Maximum elongation [%]	0	1	0.2	0	0
Evaluation	PASSED	PASSED	PASSED	PASSED	PASSED
	Steel bolts grade 3.6				
Elongation at fracture [%]	25				
Maximum elongation [%]	0	0	0	0	0
Evaluation	PASSED	PASSED	PASSED	PASSED	PASSED
	St 12 - HAZ				
Elongation at fracture [%]	28				

Maximum elongation [%]	0.1	0.1	17.7	0.5	0.1
Evaluation	PASSED	PASSED	PASSED	PASSED	PASSED
	Delrin-POM				
Elongation at fracture [%]	30				
Maximum elongation [%]	0	0	0	0	0
Evaluation	PASSED	PASSED	PASSED	PASSED	PASSED

2.3 Simulation results PA-570

2.3.1 Evaluation of plastic strain in the locking systems for given load cases:

The value of plastic strain in material of the locking systems is related to elongation of the used material. Contour representations of plastic strain in structures of the locking systems for the worst scenarios are shown in the attachment 1.

LONGITUDINAL FORWARD DECELERATION (+Z):
Attachment 1.1 – Computational results
Maximum plastic strain was found in 250 ms of the running time, see fig. 24. This loading scenario causes the maximum plastic strain in the spring. Other parts did not reach plastic region. None of the plastic strain value exceeded the limit.

LONGITUDINAL REARWARD DECELERATION (-Z):
Attachment 1.2 – Computational results
Maximum plastic strain was found in 250 ms of the running time, see fig. 25. This loading scenario causes the maximum plastic strain in the belt holder. None of the plastic strain value exceeded the limit.

LATERAL SIDEWARD DECELERATION (+X):
Attachment 1.3 – Computational results
Maximum plastic strain was found in 250 ms of the running time, see fig. 26. This loading scenario causes the maximum plastic strain in the bottom main part. None of the plastic strain value exceeded the limit.

VERTICAL DOWNWARD DECELERATION (-Y):
Attachment 1.5 – Computational results
Maximum plastic strain was found in 250 ms of the running time, see fig. 27. This loading scenario causes the maximum plastic strain in the spring. Other parts did not reach plastic region. None of the plastic strain value exceeded the limit.

VERTICAL UPWARD DECELERATION (+Y):
Attachment 1.5 – Computational results
Maximum plastic strain was found in 250 ms of the running time, see fig. 28. This loading scenario causes the maximum plastic strain in the spring. Other parts did not reach plastic region. None of the plastic strain value exceeded the limit.

2.3.2 Maximum plastic strain for all load cases with respect to material assignment:

Scenario	Forward	Rearward	Sideward	Downward	Upward
	AISI-302				
Elongation at fracture [%]	40				
Maximum elongation [%]	0.8	0.7	1.2	0.9	0.7
Evaluation	PASSED	PASSED	PASSED	PASSED	PASSED
	AISI-1008				
Elongation at fracture [%]	42				
Maximum elongation [%]	0	1.1	1.9	0	0
Evaluation	PASSED	PASSED	PASSED	PASSED	PASSED
	AISI-6063-T5				
Elongation at fracture [%]	12				
Maximum elongation [%]	0	0	0	0	0
Evaluation	PASSED	PASSED	PASSED	PASSED	PASSED
	Steel bolts grade 3.6				
Elongation at fracture [%]	25				
Maximum elongation [%]	0	0	1.4	0	0
Evaluation	PASSED	PASSED	PASSED	PASSED	PASSED
	PA6.6-glass reinf-30p				
Elongation at fracture [%]	4				
Maximum elongation [%]	0	0	0	0	0
Evaluation	PASSED	PASSED	PASSED	PASSED	PASSED

3. Specimen submitted to test on: 2020-03-10

4. Date of test: 2020-03-12

IV. Attachments

Attachment No. 1: Locks-TAC-EN1789_Romeba_ENG.pdf
No. of pages: 27

Measuring and test equipment and test site meet the requirements of the applicable legislation. This report must never be reproduced incomplete and without a written permission of the testing laboratory.

V. Final assessment

The described sample

complies

The analyzed locking systems meet criteria for all five load cases. None of the plastic strains exceed the limit. Test subjects (chairs) securely remain in the locking systems during the test as well.

Promeba locking systems PA-271, PA-281 and PA-570 **passed** the ČSN EN 1789, paragraph 4.5.9 and 6.3.5. Medical vehicles and their equipment - Road ambulances.

Company TÜV SÜD CZECH s.r.o. nor its employees are responsible for the results delivered by the customer.

This technical report consists of pages No. 1 to 27 and 26 pages of attachments.

Jakub Prchal
Report author

Jakub Jelínek
Head of CAE Department
Computer Aided Services

Prague, 2020-03-12

Drawings:

1.1: PA-271 - Longitudinal forward deceleration (+Z):

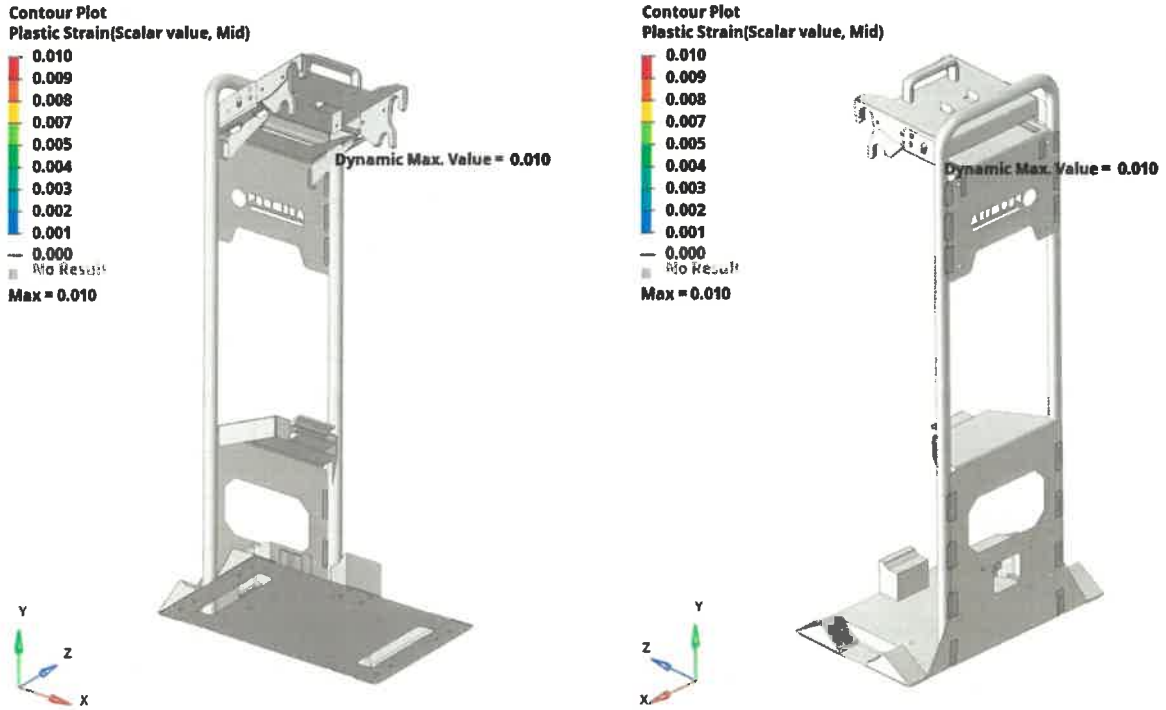

Fig. 14 – Plastic strain for longitudinal forward deceleration

1.2: PA-271 - Longitudinal rearward deceleration (-Z):

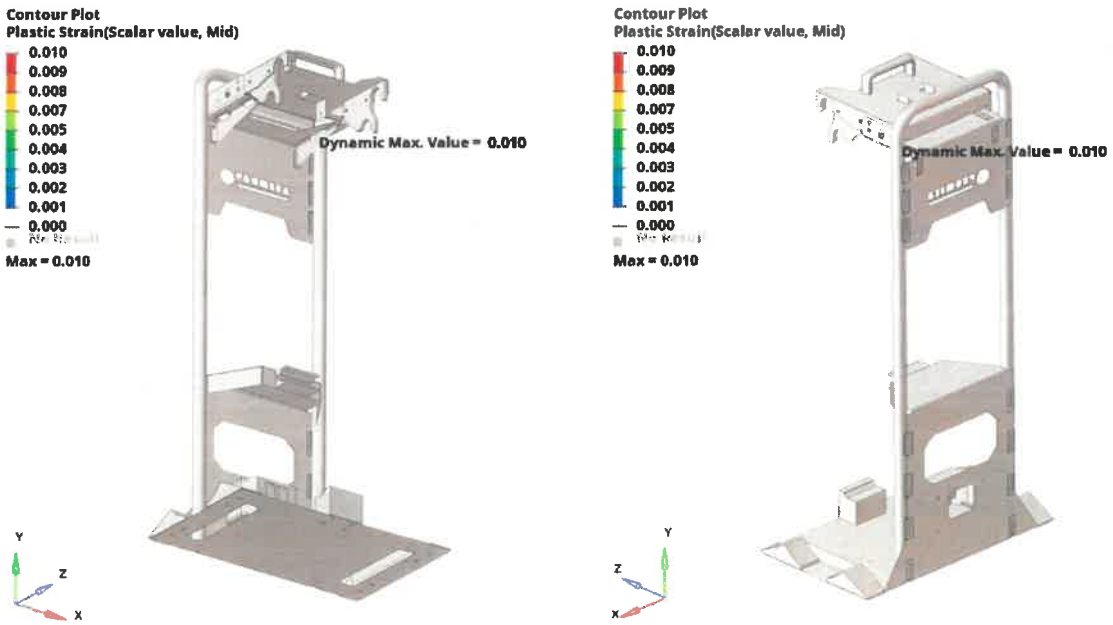

Fig. 15 – Plastic Strain for longitudinal rearward deceleration

1.3: PA-271 - Lateral sideward deceleration (+X):

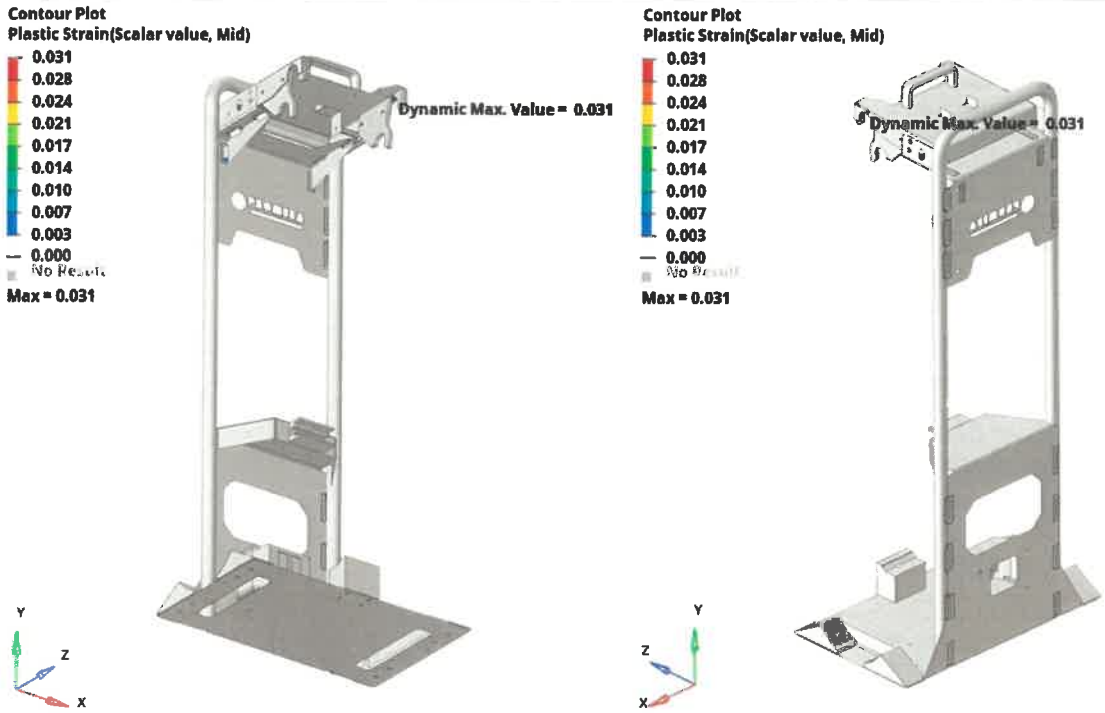

Fig. 16 – Plastic Strain for lateral sideward deceleration

1.5: PA-271 - Vertical downward deceleration (-Y):

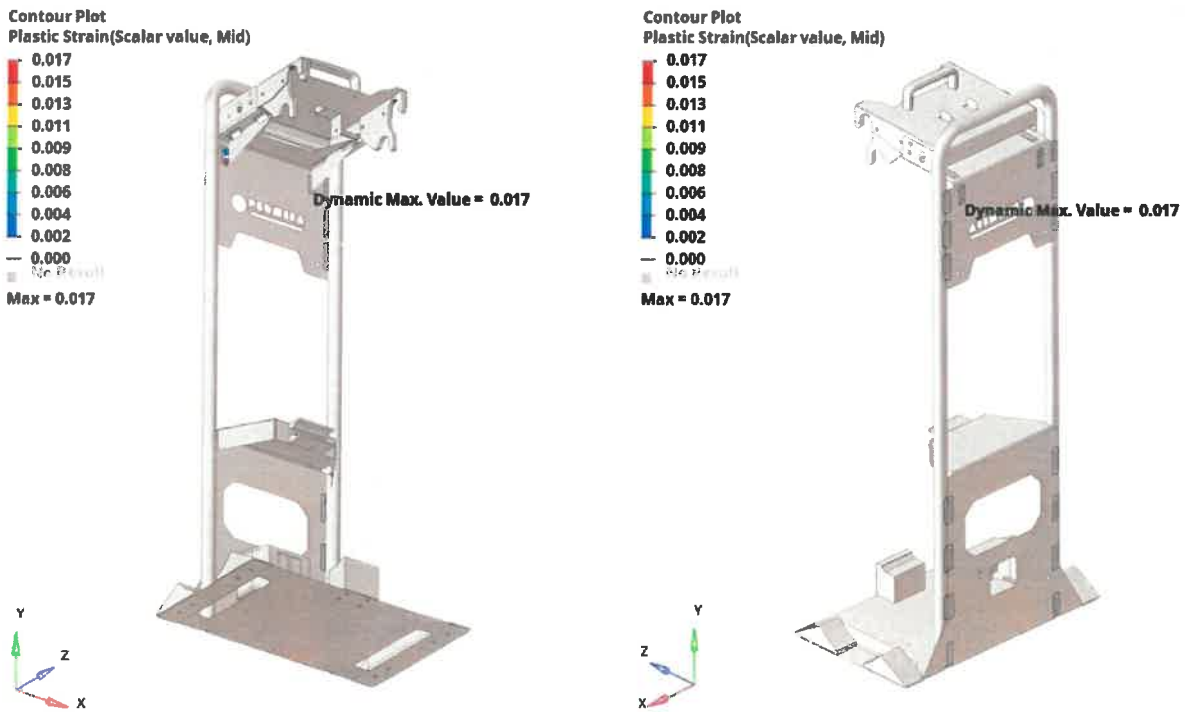

Fig. 17 – Plastic Strain for vertical downward deceleration

1.5: PA-271 - Vertical upward deceleration (+Y):

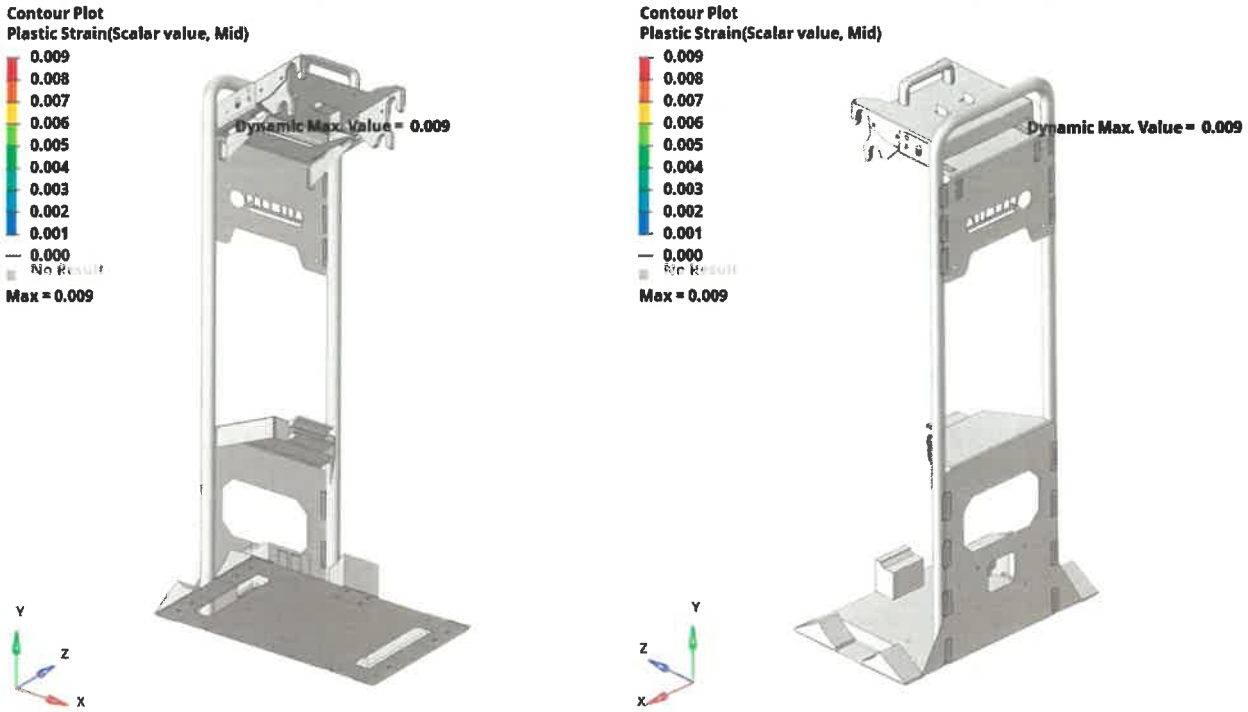

Fig. 18 – Plastic Strain for vertical upward deceleration

1.6: PA-281 - Longitudinal forward deceleration (+Z):

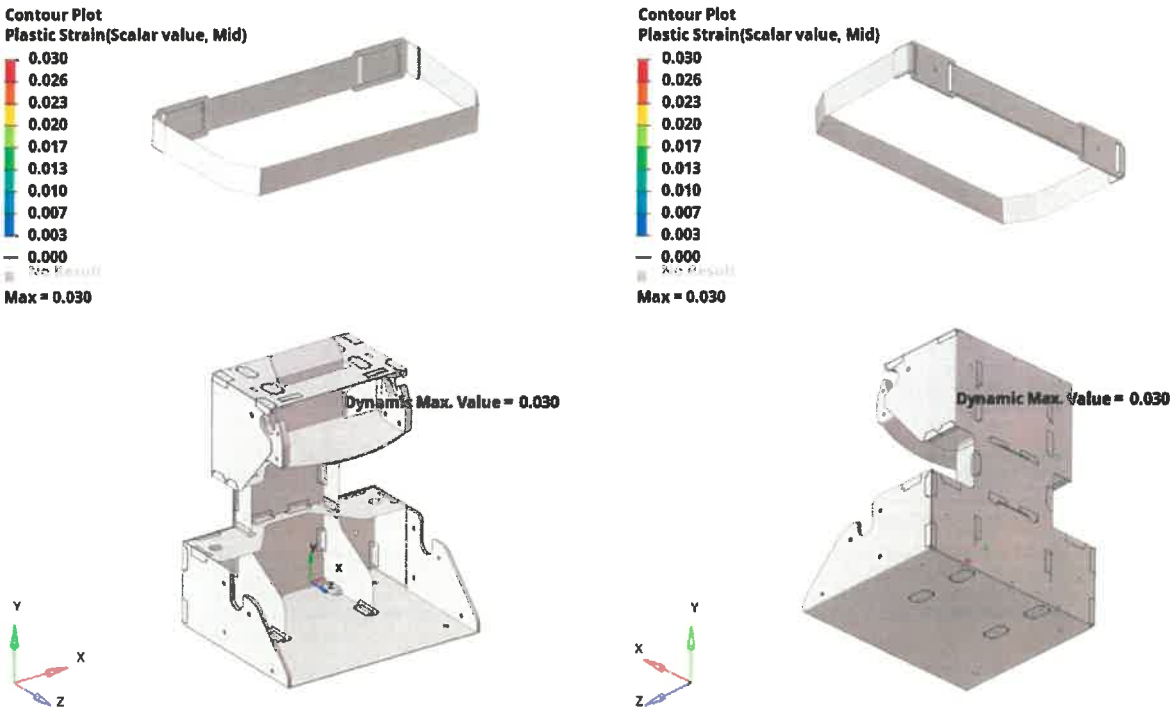

Fig. 19 – Plastic strain for longitudinal forward deceleration

1.7: PA-281 - Longitudinal rearward deceleration (-Z):

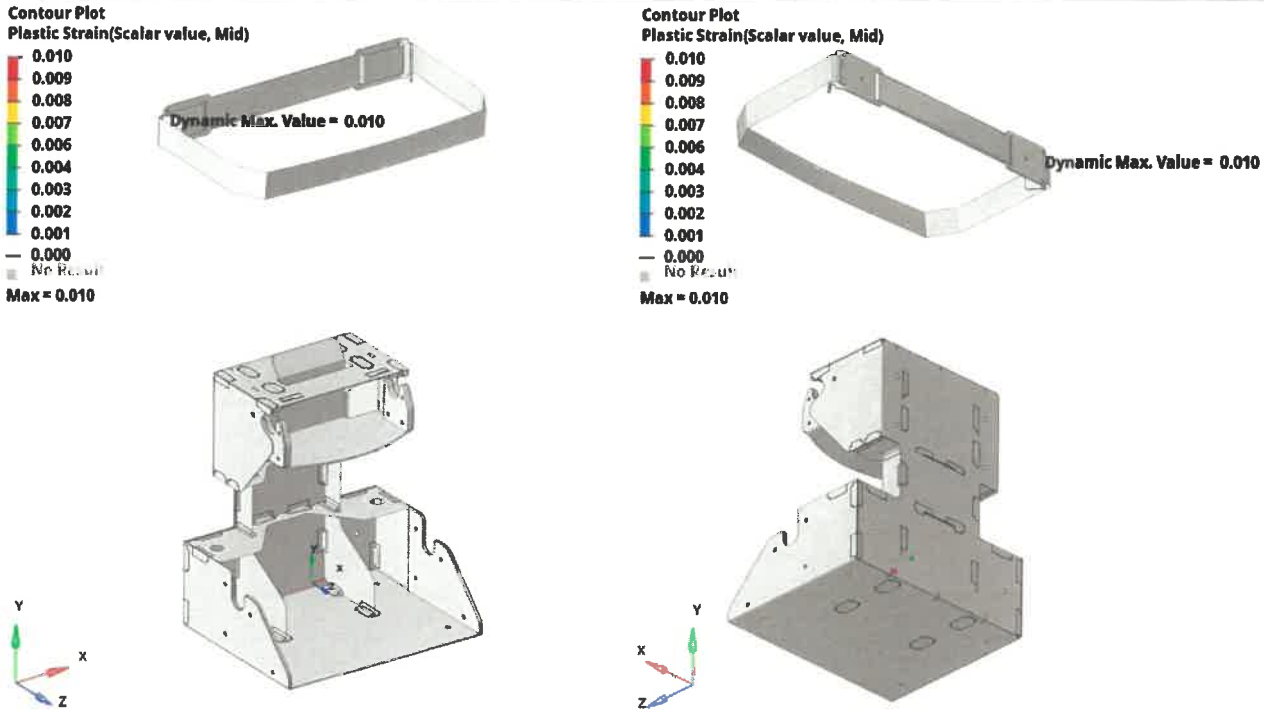

Fig. 20 – Plastic Strain for longitudinal rearward deceleration

1.8: PA-281 - Lateral sideward deceleration (+X):

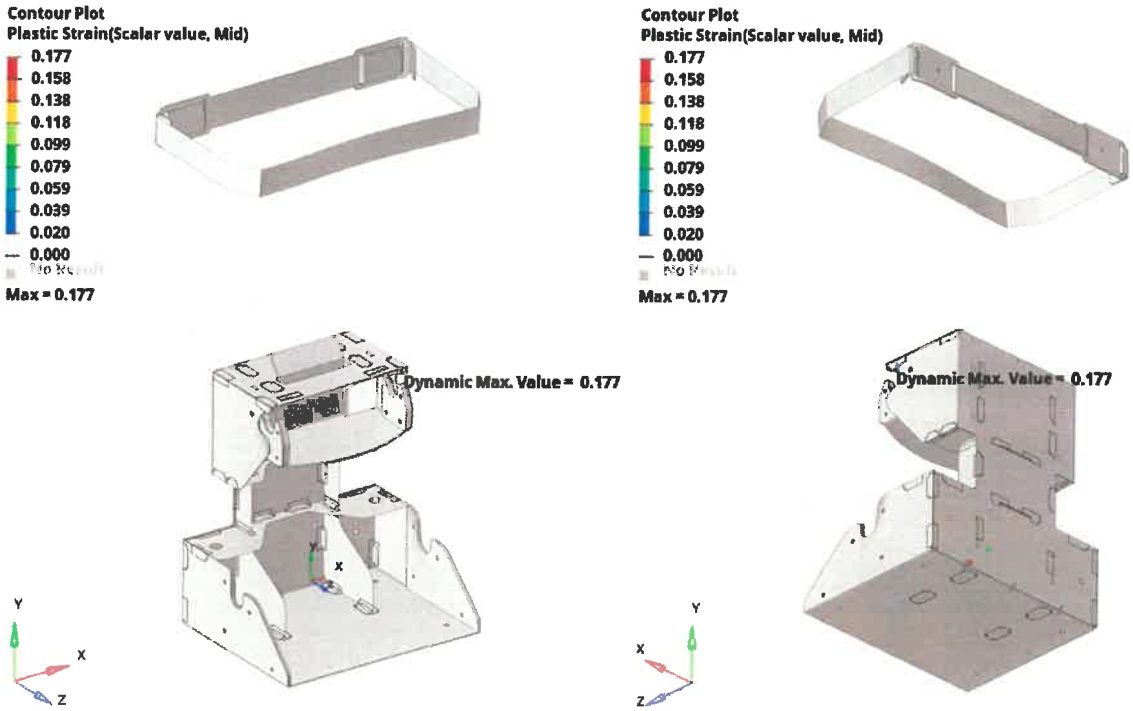

Fig. 21 – Plastic Strain for lateral sideward deceleration

1.9: PA-281 - Vertical downward deceleration (-Y):

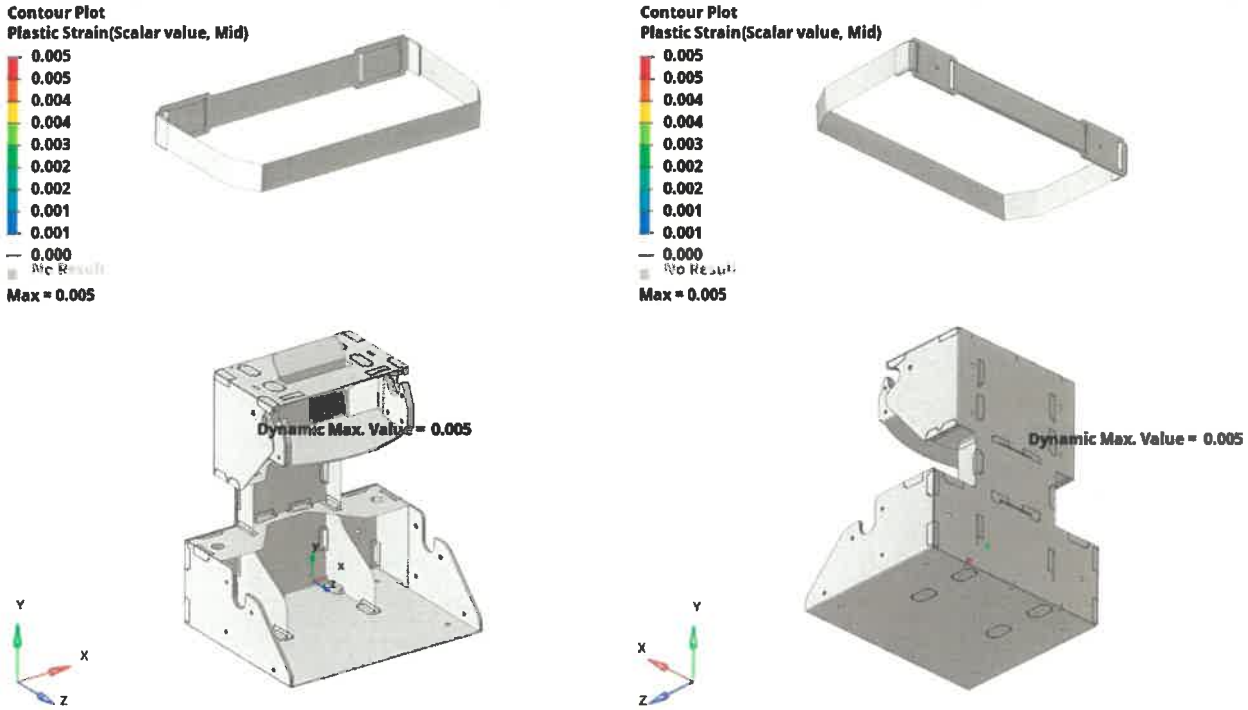

Fig. 22 – Plastic Strain for vertical downward deceleration

1.10: PA-281 - Vertical upward deceleration (+Y):

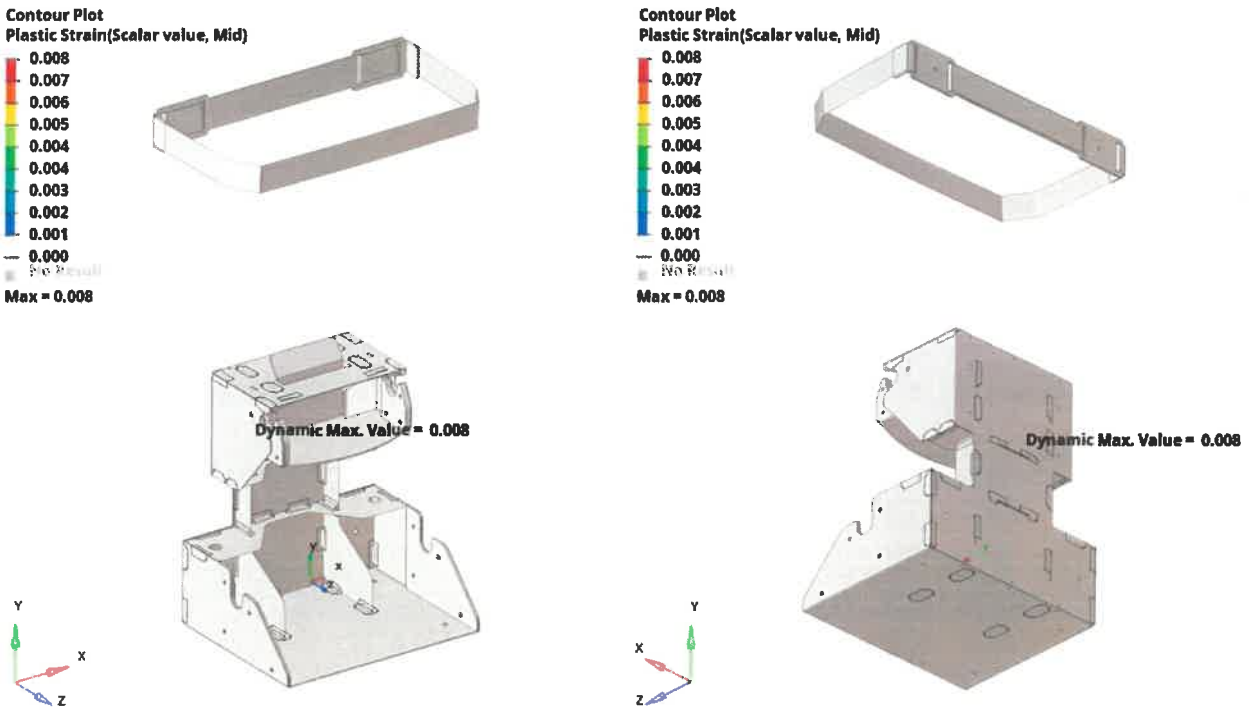

Fig. 23 – Plastic Strain for vertical upward deceleration

1.11: PA-570 - Longitudinal forward deceleration (+Z):

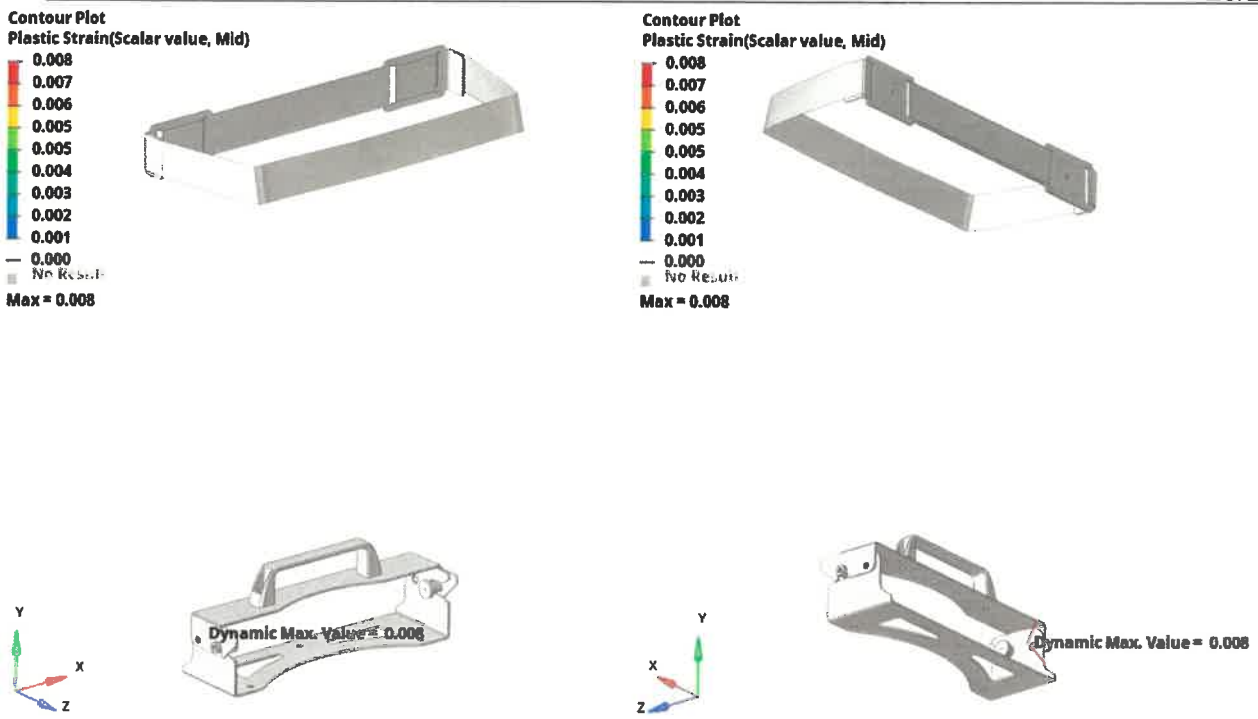

Fig. 24 – Plastic strain for longitudinal forward deceleration

1.12: PA-570 - Longitudinal rearward deceleration (-Z):

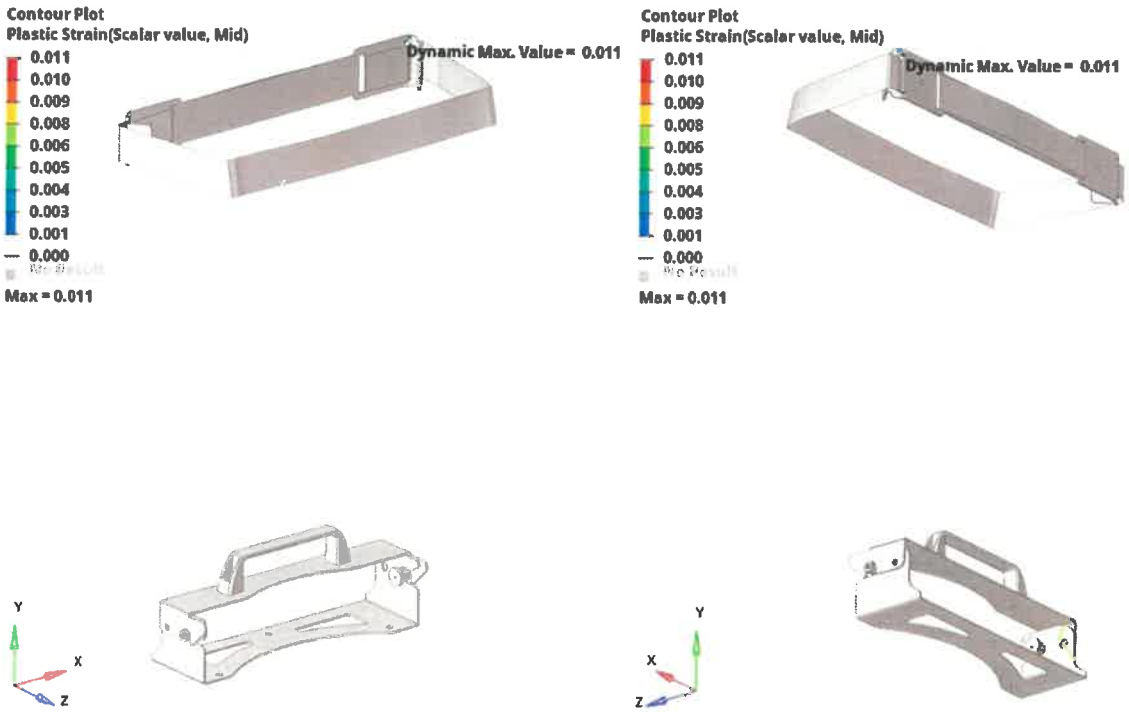

Fig. 25 – Plastic Strain for longitudinal rearward deceleration

1.13: PA-570 - Lateral sideward deceleration (+X):

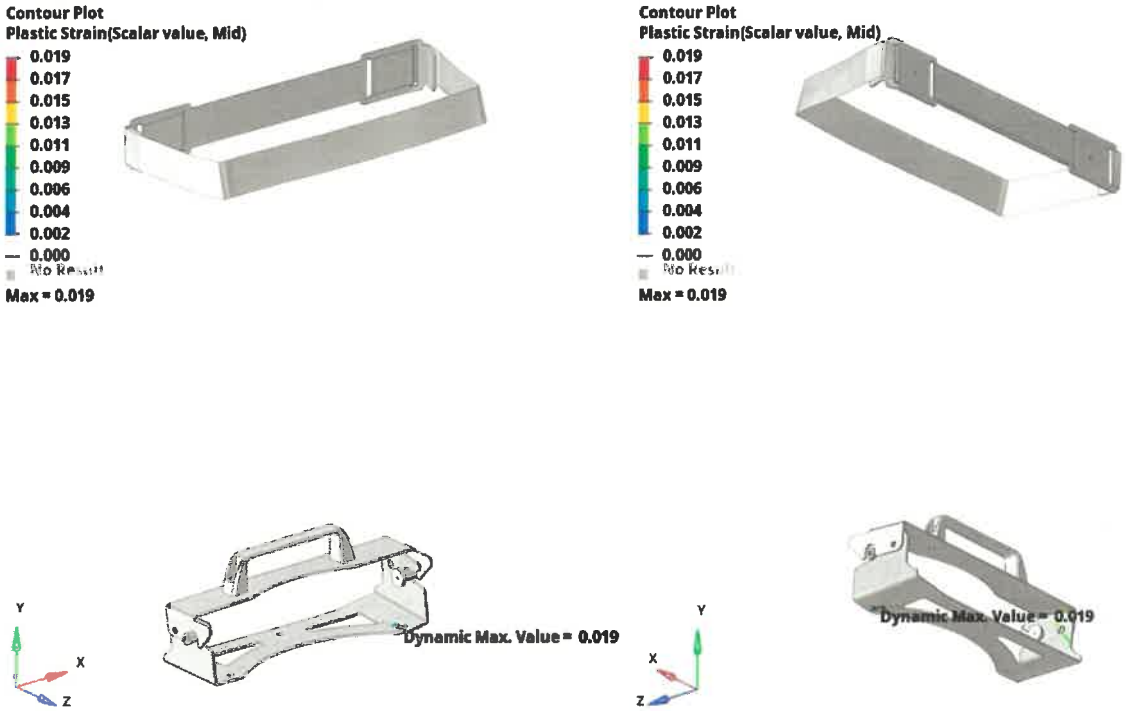

Fig. 26 – Plastic Strain for lateral sideward deceleration

1.14: PA-570 - Vertical downward deceleration (-Y):

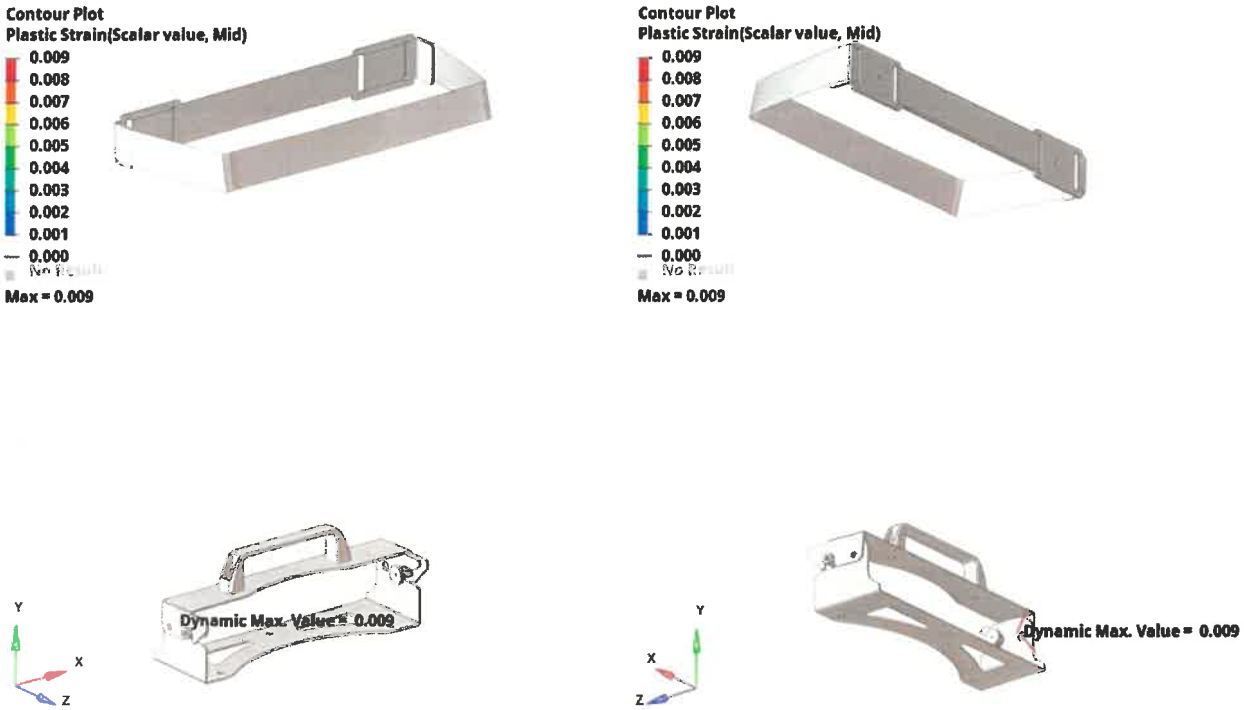

Fig. 27 – Plastic Strain for vertical downward deceleration

1.15: PA-570 - Vertical upward deceleration (+Y):

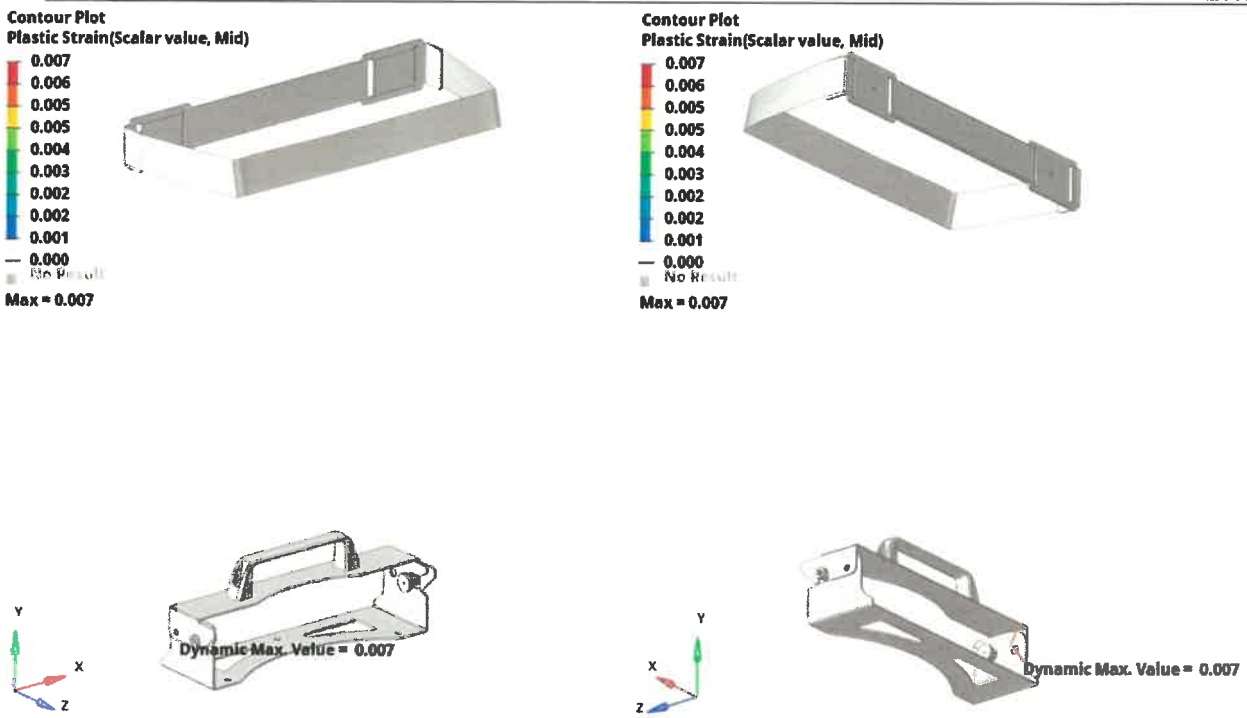

Fig. 28 – Plastic Strain for vertical upward deceleration

End of the technical report